Technical Data Sheet

Compressor model **MS34TB_T**

Voltage **220-240V 50Hz ~1**

Refrigerant **R404A**

APPLICATION

Application	High Back Pressure
Refrigerant	R404A
Evaporating Temp.	-15,0 ºC to 10,0 ºC
Expansion	Capillar/Valve
Comp. Cooling	Fan cooled
Max. ambient temp.	43,0 ºC

COMPRESSOR

Displacement	34,42 cm³
Diameter	42,86 mm
Stroke	23,85 mm
Net Weight	22,21 Kg
Oil type	ISO VG 46 ESTER
Oil charge	887 cm³

MOTOR

Nominal Power	1 5/8 hp
Voltage/Frequency	220-240V 50Hz
Voltage range	198-255 V
Type	CSR
Phase number	1 PH
Locked Rotor Amps (LRA)	41,00 A
Max. Cont. Current (MCC)	17,50 A
Main W. resist. at 25ºC	1,38 Ω
Start W. resist. at 25ºC	4,58 Ω

NOMINAL PERFORMANCE

	ASHRAE	CECOMAF
Cooling Capacity	4.550 kCal/h	4.205 W
COP	2,30 W/W	1,89 W/W
EER	1,98 kCal/Wh	1,64 kCal/Wh
Input Power	2.300 W	2.221 W
Current	11,50 A	11,10 A

APPROVALS

TEST CYCLE CONDITIONS

	ASHRAE	**CECOMAF**
	HBP (D)	**HBP (C)**
Evaporating temp. (T_e)	7,2 ºC	5,0 ºC
Condensing temp. (T_c)	55,0 ºC	55,0 ºC
Liquid temp. ($T_{liq.}$)	46,0 ºC	55,0 ºC
Ambient temp. ($T_{amb.}$)	35,0 ºC	32,0 ºC
Suction temp. ($T_{suction}$)	35,0 ºC	32,0 ºC
Voltage/Frequency	220 V 50 Hz	220 V 50 Hz

ELECTRICAL COMPONENTS

Starting capacitor	88-108 µF 330 V			
Run capacitor	25 µF 420 V			
Relay	Option 1	Option 2		
Reference	3ARR3 10AS3	RVA 3G..		
Pick-Up	180-195 V	180-195 V		
Drop-Out	40-105 V	40-105 V		
Protector	Option 1	Option 2		
Reference	CRA38008	GA3PLS00		
Current	36,50 A	36,50 A		
Time check	7,5-14 seg	6,0-16 seg		
Disc temp. (Open/Close)	130,00 / 69,00 ºC	125,00 / 69,00 ºC		

Technical Data Sheet

cubigel compressors

ASHRAE

Tc ºC	Te ºC	Cooling Capacity kCal/h	Consumption W	Current A	COP W/W	EER kCal/Wh
40	-15	2.525	1.360	7,08	2,16	1,86
40	-10	3.169	1.477	7,59	2,50	2,15
40	-5	3.871	1.610	8,18	2,80	2,40
40	0	4.630	1.758	8,85	3,06	2,63
40	5	5.447	1.923	9,63	3,30	2,83
40	7,2	5.825	2.000	10,00	3,39	2,91
40	10	6.322	2.103	10,50	3,50	3,01
45	-15	2.300	1.400	7,25	1,91	1,64
45	-10	2.899	1.531	7,82	2,20	1,89
45	-5	3.556	1.677	8,48	2,47	2,12
45	0	4.270	1.839	9,23	2,70	2,32
45	5	5.042	2.017	10,08	2,91	2,50
45	7,2	5.400	2.100	10,49	2,99	2,57
45	10	5.872	2.210	11,04	3,09	2,66
50	-15	2.075	1.440	7,43	1,68	1,44
50	-10	2.629	1.584	8,06	1,93	1,66
50	-5	3.241	1.744	8,79	2,16	1,86
50	0	3.910	1.919	9,61	2,37	2,04
50	5	4.637	2.111	10,54	2,55	2,20
50	7,2	4.975	2.200	10,99	2,63	2,26
50	10	5.421	2.318	11,59	2,72	2,34
55	-15	1.850	1.480	7,60	1,45	1,25
55	-10	2.359	1.638	8,30	1,68	1,44
55	-5	2.926	1.811	9,10	1,88	1,62
55	0	3.550	2.000	10,00	2,06	1,78
55	5	4.232	2.205	11,02	2,23	1,92
55	7,2	4.550	2.300	11,50	2,30	1,98
55	10	4.971	2.425	12,15	2,38	2,05
60	-15	1.625	1.520	7,78	1,24	1,07
60	-10	2.089	1.691	8,54	1,44	1,24
60	-5	2.611	1.878	9,41	1,62	1,39
60	0	3.190	2.081	10,39	1,78	1,53
60	5	3.827	2.299	11,49	1,94	1,66
60	7,2	4.125	2.400	12,02	2,00	1,72
60	10	4.521	2.533	12,72	2,08	1,78

CECOMAF

Tc ºC	Te ºC	Cooling Capacity W	Consumption W	Current A	COP W/W	EER kCal/Wh
40	-15	2.643	1.368	7,12	1,93	1,67
40	-10	3.325	1.486	7,63	2,24	1,93
40	-5	4.061	1.620	8,22	2,51	2,17
40	0	4.851	1.770	8,91	2,74	2,37
40	5	5.695	1.937	9,70	2,94	2,54
40	7,2	6.084	2.015	10,07	3,02	2,61
40	10	6.594	2.120	10,59	3,11	2,69
45	-15	2.379	1.408	7,29	1,69	1,46
45	-10	3.002	1.540	7,86	1,95	1,68
45	-5	3.680	1.688	8,53	2,18	1,88
45	0	4.412	1.852	9,29	2,38	2,06
45	5	5.198	2.032	10,15	2,56	2,21
45	7,2	5.562	2.116	10,57	2,63	2,27
45	10	6.039	2.228	11,13	2,71	2,34
50	-15	2.114	1.449	7,46	1,46	1,26
50	-10	2.680	1.594	8,10	1,68	1,45
50	-5	3.299	1.755	8,84	1,88	1,62
50	0	3.973	1.933	9,68	2,06	1,78
50	5	4.702	2.127	10,62	2,21	1,91
50	7,2	5.039	2.217	11,08	2,27	1,96
50	10	5.484	2.336	11,69	2,35	2,03
55	-15	1.850	1.489	7,64	1,24	1,07
55	-10	2.357	1.648	8,35	1,43	1,24
55	-5	2.919	1.823	9,15	1,60	1,38
55	0	3.535	2.014	10,07	1,76	1,52
55	5	4.205	2.221	11,10	1,89	1,64
55	7,2	4.517	2.318	11,59	1,95	1,68
55	10	4.930	2.445	12,25	2,02	1,74
60	-15	1.585	1.529	7,82	1,04	0,90
60	-10	2.034	1.702	8,59	1,20	1,03
60	-5	2.538	1.890	9,47	1,34	1,16
60	0	3.096	2.095	10,47	1,48	1,28
60	5	3.708	2.316	11,58	1,60	1,38
60	7,2	3.995	2.418	12,12	1,65	1,43
60	10	4.375	2.553	12,83	1,71	1,48

EN12900

X	Cooling Capacity (W)	Consumption (W)	Current (A)	Mass Flow (kg/h)
1	8.350,5442882897	1.153,3941011542	5,7468553249	98,703418535908
2	258,5798337510	10,8673224837	0,0332372368	3,2253757682252
3	-90,8581337303	16,7621126640	0,0840319868	-0,46696948937385
4	1,0270009715	0,3680793693	0,0025417641	0,035664631954932
5	-2,4850296113	0,5671141150	0,0031931599	-0,0047941212990676

Equation	$x_1 + x_2Te + x_3Tc + x_4Te^2 + x_5TeTc$

COMPRESSOR DIMENSIONS

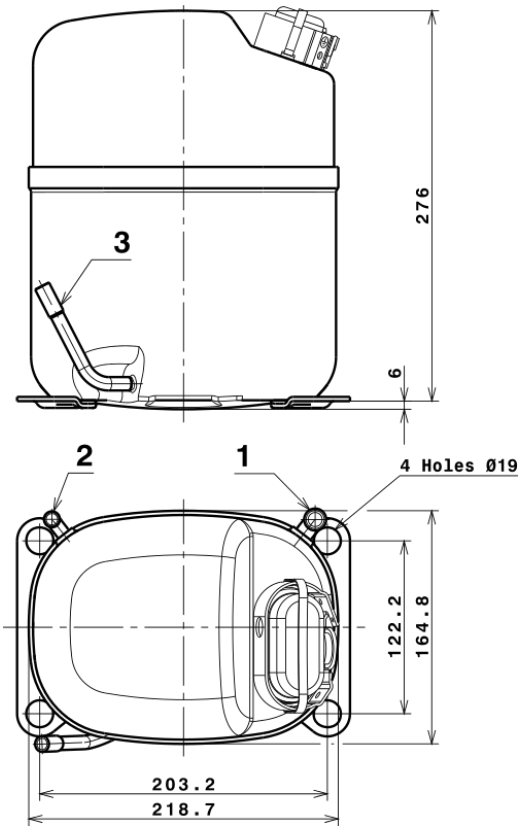

	DESIGNATION	INTERNAL DIAM.
1	Suction	12,7 mm
2	Service	9,7 mm
3	Discharge	8,0 mm

WIRING DIAGRAMS AND ELECTRICAL ASSEMBLY

CSR CONNECTION (EXTERNAL CONNECTING BOX) (S range)

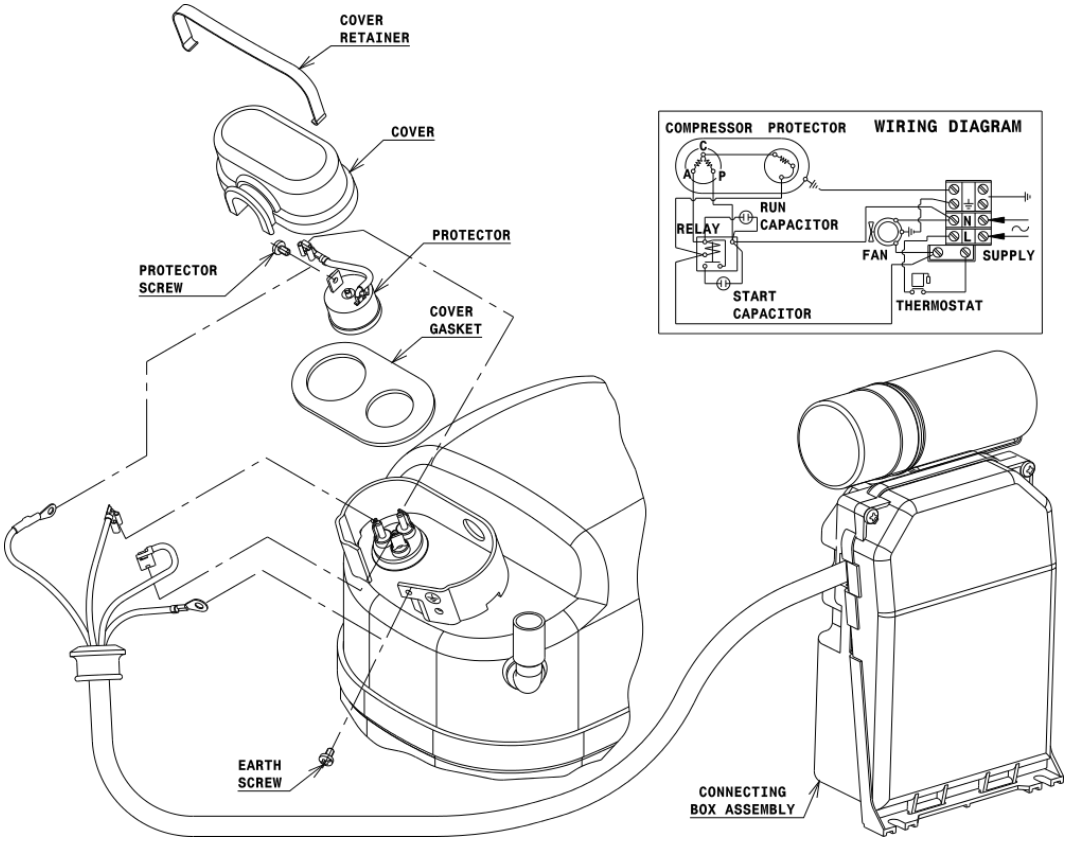

FIXINGS

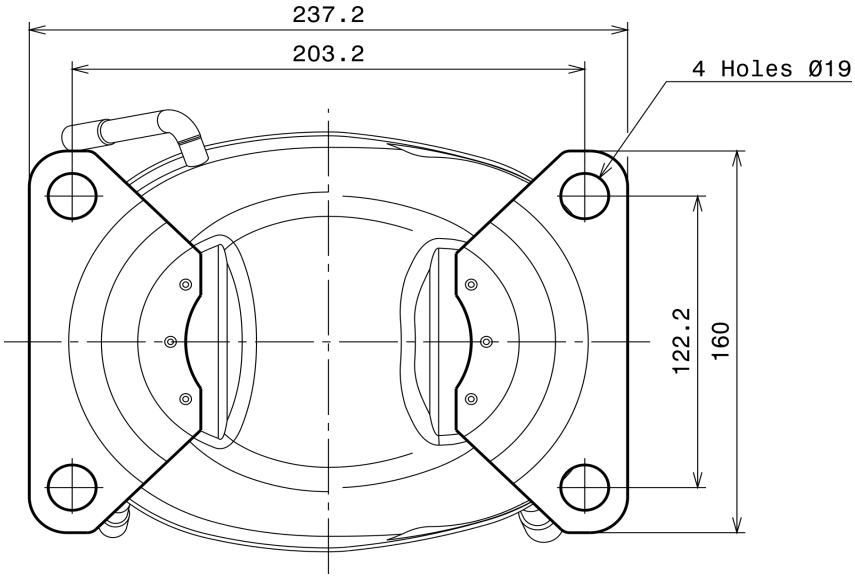

SILENT BLOCKS (MOUNTING ACCESSORIES)

STANDARD

Ø19 holes (203.2x122.2 net)

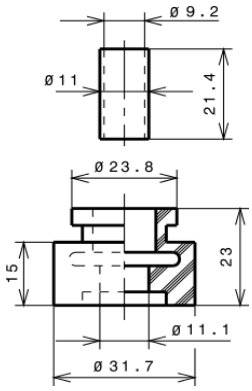

SOA
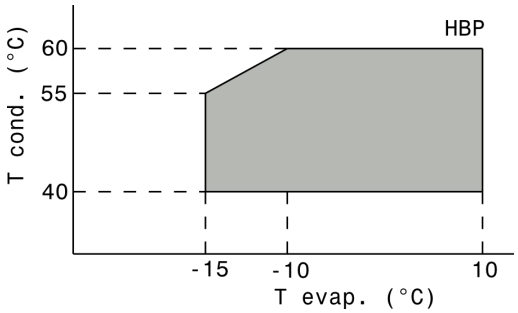
SOA R404A HBP