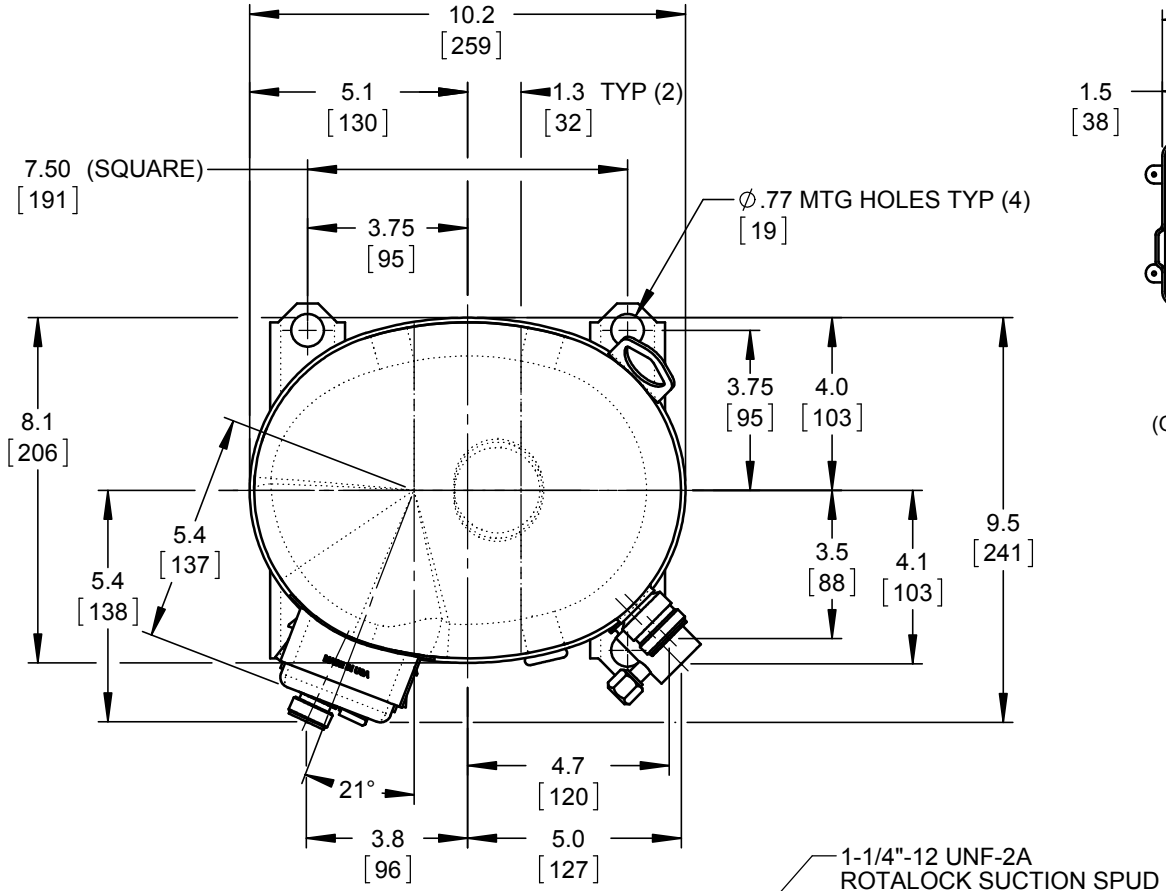

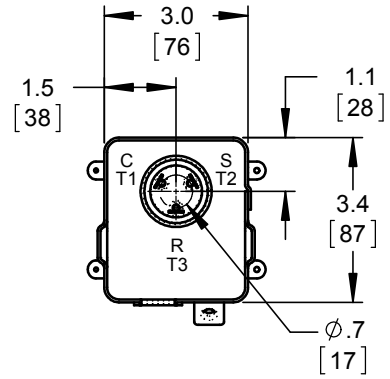

TERMINAL BOX
(QUICK-CONNECT
TERMINALS)

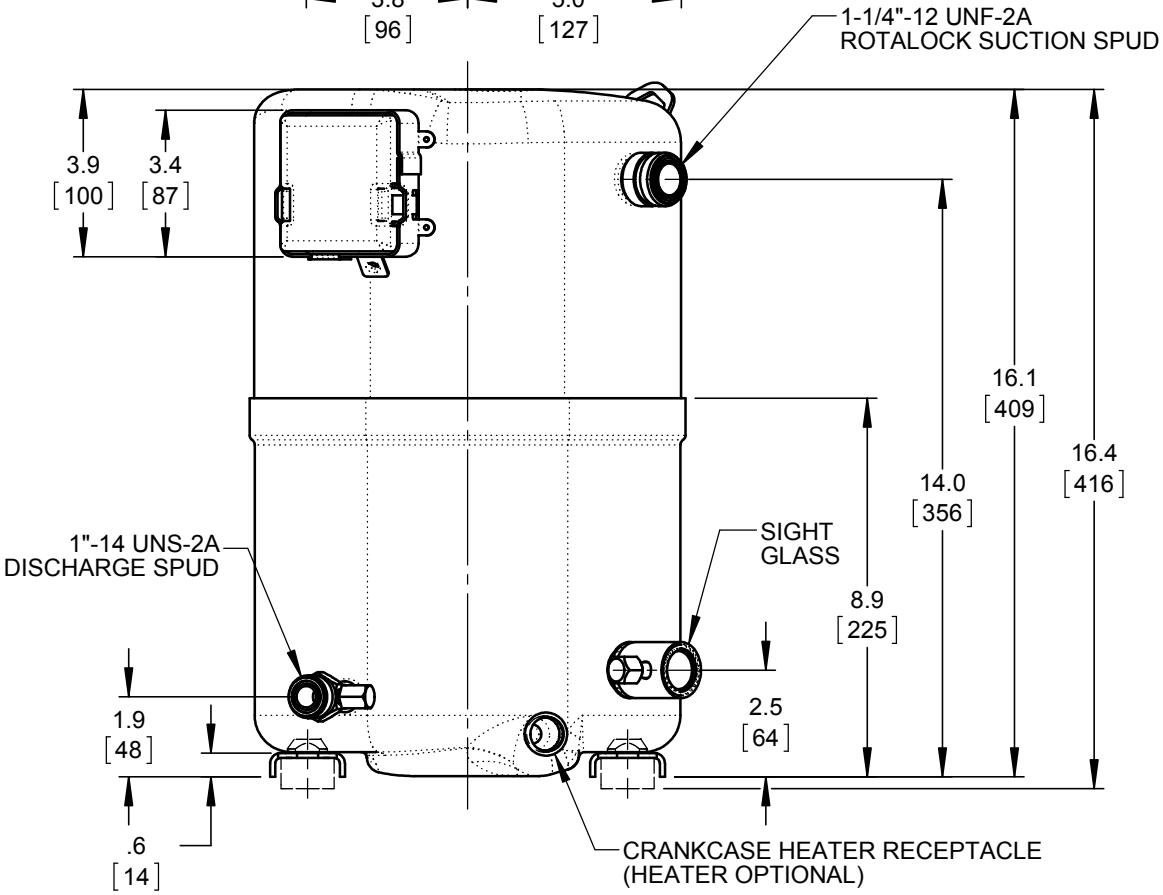

MODEL: **H73A543DBEA**

VOLTAGE:	PH:	Hz:	LRA:
460	**3**	**60**	**53**
380/415	**3**	**50**	**53**

TOLERANCES UNLESS SPECIFIED

ONE PLACE DECIMAL: ±.125 (3.158mm)
TWO PLACE DECIMAL: ±.06 (1.5mm)
ANGULAR: ±5°

MARKETING REQ:

CHKD: RDD	7/26/11
DRWN: JLH	4/13/11

E/N RELEASE: **G02502**

REVISIONS

B	V06701	BAM
C	V28003	BAM

Bristol Compressors International Inc.

B/M NO: **702657**